ANALYTICAL CUMULATIVE EXAMINATION
APRIL 20, 2001

The following electronic circuits are used in electrochemical instrumentation to measure the current being generated in an electrochemical cell. The cell current, i_f, can be modeled as a simple DC current source, the magnitude of which must be measured. Modern electrochemical instrumentation uses operational amplifiers (op-amp) to accomplish the current measurement.

For each of the following circuits, derive a relationship showing how the output voltage, V_o, of the op-amp is related to the current coming from the cell. [In case you forgot (or never knew) the performance of an op-amp can be described by three rules: Inputs are at the same potential; no current is drawn at the input; infinite output current is available.]

1 a. For the circuit shown below, derive an expression for V_o in terms of i_f and R.

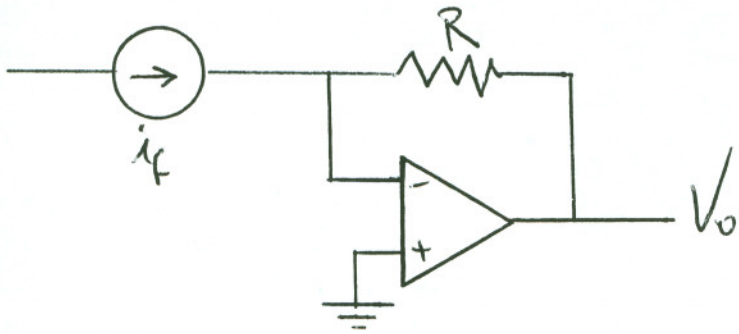

b. If R = 10kΩ and i_f = 1μA, what is the value of V_o?

2 a. For the circuit shown below, find V_o in terms of i_f and resistances.

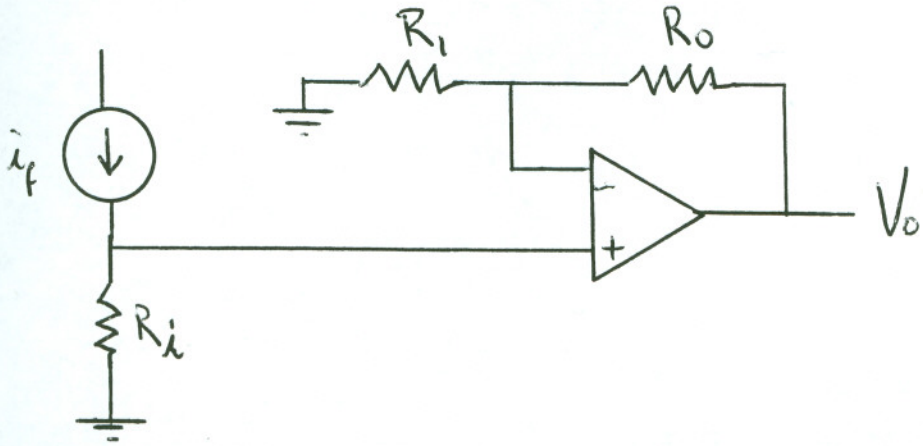

b. Compare the current measuring arrangement of this circuit with that from question 1. What are some advantages and disadvantages of each circuit?

3 a. Derive an expression for V_o in terms of i_f, X and resistances.

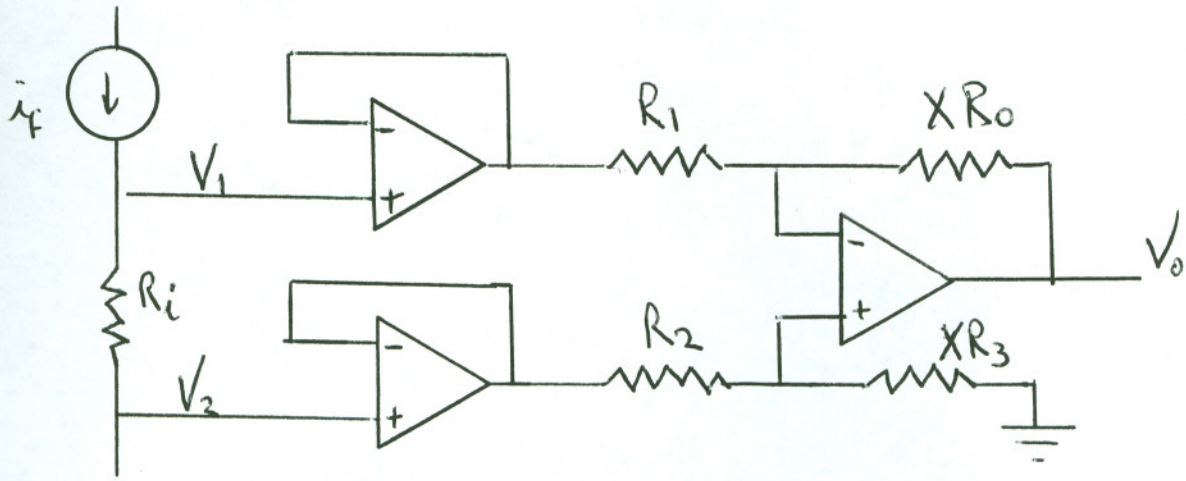

b. Calculate V_o if resistors R_o, R_1, R_2, and R_3 have a value of R = 10kΩ and X is a multiplier which can have values selected from X = 1; X = 10; X = 100; or X = 1000, under the conditions that i_f = 0.01μA, R_i = 1kΩ, and X = 100.

c. If the sensitivity for i_f needed to be decreased (smaller V_o generated for the same i_f), should the value of R_i be increased or decreased?